iQxel-MW

BROCHURE

IQxel-MW™ Connectivity Test System

Superior Performance for the Next Generation of Wi-Fi

The LitePoint IQxel-MW is the world's first test solution for the next generation WiFi – 802.11ax. Ideal for both R&D and high-volume production, IQxel-MW delivers high performance verification for the most popular wireless connectivity standards including 802.11, Bluetooth, DECT and ZigBee. Additionally, IQxel-MW offers high efficiency parallel testing for up to 16 devices.

As 802.11ac and 802.11ax technologies are adopted by device makers, product requirements are becoming more complicated. IQxel-MW is equipped with new features that simplify production testing and lower production costs. The IQxel-MW series is available in three configurations, 2 ports, 8 ports, and 16 ports, which support up to 2x2 and 4x4 true MIMO testing.

The integrated front-end of the IQxel-MW covers all 802.11ac Wave 2 and 802.11ax test configurations, including 80, 160, 80+80 MHz, dual-band concurrent, and implicit beamforming … without the need for external components. This unique front-end design gives you flexibility in setting up your production line while lowering your overall production costs.

Built From the Ground Up for Manufacturing

LitePoint is the industry leader for testing wireless devices in high-volume production environments. The IQxel-MW takes full advantage of that expertise with flexible insertion features and efficient parallel multi-DUT testing. In addition, LitePoint partners with the major wireless silicon vendors to develop chipset specific software test solutions and we now have solutions for over 350 of the most widely used wireless chipsets. The IQxel-MW platform is also backward-compatible with existing LitePoint test solutions, making production deployment fast and easy.

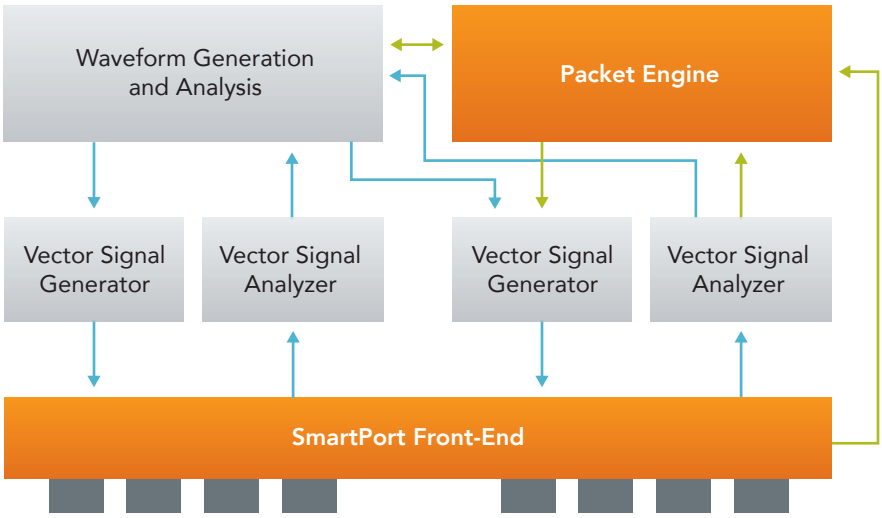

RF1A – RF4B (WiFi, BT, ZigBee, DECT, etc.)

LITEPOINT

© 2017 LitePoint, A Teradyne Company. All rights reserved.

System Capabilities and Features

Integrated smart front-end for simple application setup

- Supports all 802.11ac Wave 2 and 802.11ax configurations (80+80, 160, dual-band concurrent, and 2x2 IBF calibration) without external combiner

EVM noise floor for next generation Wi-Fi

- EVM headroom for 1024QAM at 160 MHz bandwidth

Supports full range of connectivity technologies

- Addresses the requirements of the IEEE 802.11ac Wave 2 and 802.11ax specifications, Tests all IEEE 802.11 specifications, including 802.11 a/b/g/n/p/ac/ah/af/j
- Tests all Bluetooth device standards (1.x, 2.x, 3.0, 4.x, 5), DECT (ETSI EN 300 176-1), 802.15.4-based standards including ZigBee, Z-Wave and WiSUN

High test throughput for manufacturing

- LitePoint's patented Packet Engine technology provides industry-leading test speed and built-in parallel test capability for high test system efficiency
- Efficient parallel multi-DUT test enhances production capacity while reducing time-to-market

Scalable MIMO support

- Expandable architecture supports up to 8x8 true MIMO
- Supports testing of all key IEEE 802.11ac Wave 2 and 11ax MIMO specification enhancements, including MU-MIMO
- Supports beamforming and advanced phase validation

Supported Wireless Standards

- 802.11a/b/g/n/p/j
- 802.11ac/ax (optional)
- 802.11ah/af (optional)
- Bluetooth 1.x, 2.x, 3.0, 4.x, 5 (optional)
- DECT (optional)
- ZigBee/Z-Wave/WiSUN/IEEE 802.15.4 (optional)
- TD-LTE (optional)

Flexible Programming Interface

- Leverages API test routines within existing LitePoint systems and program using LitePoint's IQmeasure software
- Supports programming over Ethernet using text-based SCPI programming
- Fully backward compatible with existing LitePoint connectivity test systems

Available Turnkey Test Software Solutions

- Includes LitePoint IQfact+ software solutions for customized testing of leading WLAN / Bluetooth chipsets
- Library of hundreds of chipset specific test solutions

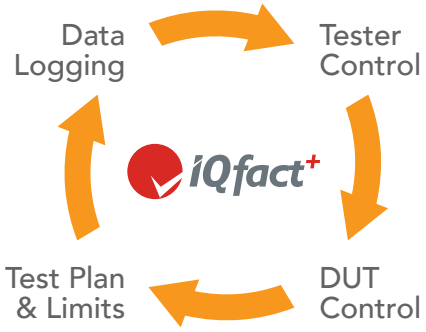

LITEPOINT

www.litepoint.com

© 2017, LitePoint, A Teradyne Company. All rights reserved. LitePoint and the LitePoint logo are registered trademarks and IQxel-MW is a trademark of LitePoint Corporation. The information furnished by LitePoint Corp. is believed to be accurate and reliable. However, no responsibility is assumed by LitePoint for its use. LitePoint reserves the right to change specifications and documentation at any time without notice. Doc. 1075-0215-001. March 2017 Rev 2